5312/096.00 32 HANNA ST DWELLING

Lot 18 DPS 22930

Valuation No. 5312 - 96 32 Hanna St Road

Owner Mr + Mrs R. Brunsdon Builder J. W. Grant Plumber & Drainlayer ~~J.T. Carter Ltd~~

Address C/o J.T. Carter Lipsey St Te Aroha Address 20A Puriri St Te Aroha Address R Brunsdon 47 Stanley Ave Te Aroha

BUILDING DESCRIPTION Dwelling

		Date	Permit No.	Issue Date
Building Permit Application	Received			
Fees Paid	Yes No N/A	2-12-92		
Amended plans				
Plumbing & Drainage Applic.	Received			
Fees Paid	Yes No N/A	21-12-92		

Site Inspection	Yes/No	Approved	any comments below
Town Planning	Yes/~~No~~	Approved ✓	DL Cavity on front wall
Health	Yes/No	Approved	to be at least 400 deep.
Council	Yes/No	Approved	
Engineers Check	Yes/No	Approved	
Footpath Deposit Notice	Yes/No		
Sec. 641 L.G. Act Relevant	Yes/No		
Title Registration Actioned	Yes/No		
Road Entrance Notice	Yes/No		
Catchment Board	Yes/No		
Fire Service	Yes/No		

Note any conditions on permit

Inspections	Initials	Date	Comments
Foundations			
Floor or Bond Beam			
Subfloor			
Prelining			
Insulation			
Plumbing			
Drains			
Finished Job			
Filed			

38.3

3.0

7.6

10.

Hanara Street

Kerb.

Bdy

5.50

Lot 18

DP 22930

Depth

1.80m

7.6

R.O.W.

SPECIFICATION

Specification of the work to be done and the materials to be used in the erection and completion of the building as per the accompanying drawings

for

Mr / Mrs R. Brunsdon

at

Hanna Street Te Aroha.

This specification is to be read in conjunction with the accompanying drawings and any other drawing which may be issued during the currency of the contract.

Any item in this specification not shown on the drawings and vice versa shall be equally binding as though included in both.

A form of contract is to be completed by both parties before the commencement of any work on the site.

Any additions, omissions or variations to the contract shall be authorised in writing and an agreed price stated.

The owners are to ensure that all boundary marker pegs are in place and exposed for inspection.

The Contractor shall observe and adhere to all By-Laws and Amendments thereto of the Council, give all necessary notices, obtain all permits, and pay all fees in connection therewith.

PRELIMINARY AND GENERAL

1 Extent of Work

This contract comprises the erection and completion in the soundest and most workmanlike manner of all the work shown on the accompanying drawings and in accordance with this specification and the supply of all plant, tools, labour, materials, fixtures and fittings required for the due completion of the work.

2 Insurance

The contractor shall at all times keep the whole of the works fully covered by insurance. 1 - Builders All Risk for the full Contract Value. 2 - Public Liability to the value $1,000,000.00. 3 - Separate insurance cover is supplied by the house removal contractor whilst the house is in transit.

3 Temporary Services

The Contractor shall arrange for all temporary services, pay all fees in connection therewith and remove same on completion of the contract. Sheds, toilet, power, water, access to the building site, scaffolding, etc., shall be supplied by the builder or by arrangement with the owner.

4 Maintenance

The Contractor shall maintain the property for a period of 30 days after completion, and any damage done, arising during that time through faulty workmanship or materials shall be made good at the Contractor's expense.

5 Completion

On completion all trade debris is to be removed from the site and the building left clean and ready for occupancy, with all services and mechanical parts in good working order.

CARPENTRY

Construction

All materials are to be the best of their respective kinds and grades, laid true to their various lines and levels and constructed in a proper tradesman like manner, to make the whole of the works a sound construction in accordance with the local bylaws.

All timber work abutting or resting on concrete is to be protected with a 3 ply bitumen - fabric damp proof course.

Plates shall be in long straight lengths. Bottom plates and wall plates to be butt jointed over studs and fastened with nail plates.

Studs are to be held to the plates with two 100mm flat headed nails at each end. Bowed studs are to be straightened with saw cuts, wedges and 100 x 25mm, 2 pieces 350mm long (one each side).

Lintels are to be checked 15, minimum into solid trimmer studs. Where built up trimmer studs are used one 100 x 50mm stud is to be run up past the trimmer to the top plate and the remaining 100 x 50mm is run up to the underside of the lintel, and blocked above.

Nogs shall be 75 x 50mm min. spaced in rows at 1.35m centres max., set out to accommodate the wall lining sheets and where required drilled or notched for ventilation. To be nailed with two 75mm nails at each end.

75 x 40 ceiling strapping to be set out to accommodate the ceiling lining sheets and 150 x 40 to be fixed on all top plates around the perimeter of each room.

Bracing to be let in flush with the face of the wall frames and raked as nearly as practicable to 45 degrees and not more than 55 degrees from horizontal. Bracing shall be continuous let in 100 x 25mm timber or continuous galvanised steel angle in accordance with Clause 69.2.3 (a) or (b) N.Z.S. 3604.

Trower Partitions where applicable, assembled and installed according to manufacturers instructions and complying with N.Z.S. 3604.

The wall frames are to be assembled, squared, braced and erected. The bottom plates are to be straightened and fastened down, the corners are to be plumbed both ways and the top plates are to be held with temporary bracing until the ceiling and roof framing has been completed.

Trusses to be fixed with two Z nails on outside plates. Outriggers to be fixed with one Z nail to gable truss. Trusses to approved design.

Spacings

Trusses - 1.2 centre max
Piles - C2B as required by foundation plan
Bearers - 150 x 100 b.g generally 4 rows
Floor joists - 150 x 50 b.g. .600 centres max
Studs - 100 x 50 and 75 x 50 b.g. .600 centres max
Purlins - 100 x 50 b.g. .900 centres max

CARPENTRY

All exterior joinery to be anodised aluminium or timber where specified.

All exterior joinery, exterior timber linings or trim and all end grain joints to be given a coat or primer or stain prior to fixing.

Grooved fascia and barge boards are to be fixed true to line and level, mitred where joined and fastened with galvanised nails except where Taylor fascia is being used.

Hardiplank or similar to be fixed over breather type building paper, plumb and in single lengths with 50mm galvanised nails. Ascot board or equivalent to gable ends.

Soffits and verges to be lined with flat fibro cement sheets with plastic jointer moulds.

The flooring is to be H.D. Particle board sheets with perforated foil under, fixed with zinc or galvanised nails punched ready for sander.

Interior wall linings generally to be 9.5mm gibraltar board sheets fixed with vertical joints and nailed with flat headed galvanised clouts, double nailed to studs and nogging. Sheets to service rooms may be glue fixed with horizontal joints.

All joints, nail holes and other imperfections are to be stopped flush and left ready for the decorator.

Ceiling linings to be 9.5mm gibraltar board, well glued or wadded to ceiling framing and with all joints, nail holes and other imperfections stopped flush and left ready for the painter, or Michaelangelo tiles, or Plaster board sheets with joints taped.

Nog for and build in the various joinery fitments and trim to walls, floor and ceiling with quadrant and bevelled mouldings as required.

Interior doors are to be fitted with 1½ pairs of 90mm A.C. or F.B. loose pin butt hinges.

Architraves to fitted in single lengths, with glued mitred joints if pre-grooved jambs not available.

Skirtings to be scribed to the floor at internal corners and mitred at external angles.

Insulation - ceilings either R 2.2 batts or Rocwool, walls R 1.6 batts, floor perforated foil with 100mm dish between joists.

Roof Covering - The roof will be six rib galvanised long run iron or equivalent (or as specified) laid on building paper over 50mm wire netting. The roofing contractor will be held fully responsible for the roof and for its being weatherproof.

CARPENTRY

Concrete Work

Concrete to be mixed with a test of 17.5 m.p.a after 28 days. Formwork shall be erected and braced in such a manner that the concrete shall finish to the dimensions shown or specified. The formwork is to be hosed out and kept wet before and while the concrete is being placed or coated with mould oil prior to concrete placement.

Construct the footings and floor slab as detailed on the drawings. Hard filling to be 75mm down scoria or 'pit run' metal compacted in layers of 150mm depth maximum. Blind with 25mm of sand and overlay with black polythene dampproof course 0.25mm thick with taped joints, lapped 150mm and sealed with a water proof pressure sensitive tape.

All floor slabs to be laid true to line and level, screeded, wood floated and finished with a power float to a fine finish, as detailed on the drawings.

Holding down bolts to be 300mm maximum from corners and at .900mm centres maximum. 100mm M12 dynabolts to be used in place of holding down bolts. Ramset fasteners to be used on all internal paritions.

Allow to attend on other trades and clean up on completion.

PLUMBING

The whole of the plumbing will be completed in strict accordance with the local authority's bylaws. The plumber shall obtain all necessary permits and pay all fees in connection with this work.

Supply and fix all flashings, back primed with calcium plumbate primer.

Supply and fix materials for galvanised 'straight-line', P.V.C., or Taylor fascia gutter laid with even fall to 75mm downpipe. Supply and fix P.V.C. downpipes to ground. Stormwater disposal is the owners responsibility.

Allow to attend on other trades and clean up on completion.

BraceS

A computer program to calculate bracing requirements
and provide bracing schedules to NZS 3604:1990

Project Information

client : R BRUNSDON	date : 281092
address: HANNA STREET	job No : H012
: TE AROHA	
:	designer : MVC
	signature:
lot no : 18	licencee : Mount View
DP no : S22930	Construction

Don Thomson owns this program (BraceS) and has sold a licence to Mount View Construction who has contracted to use (and is responsible for other people to use) this copy of BraceS one on computer at any one time
registration no: 1066

Don Thomson assumes no responsibility for the accuracy, validity or applicability of the results of BraceS.

ZONE INFORMATION

What earthquake zone is the building in (refer figure 2.2)	zone B
Has the building wind zone been classified (some Local Authorities have classified sites as particular wind zones)	already determined
What wind zone is the building in	very high

LAYOUT OF HOUSE HANNA STREET

Axis or direction nominated as ACROSS the building (needed for reference only ie north-south etc)	east-west
Is there a ridge running across the building	no ridge
Is there a ridge running along the building (can be ridge ALONG or ACROSS or both)	ridge along
Is house single or double storey	single
Is there a room in the roof space (floor area not exceeding 50% of floor below)	no room in roof space
Does the floor support a 3.0 kPa live load (eg motels, restaurants, offices etc.)	normal load
Is the foundation a table 4.1 type or slab or other	table 4.1

DIMENSIONS

Average roof slope (degrees)	20 deg
Is roof cladding Light or Heavy	light
Is bottom storey wall cladding Light or Heavy	light
Enter Length overall of BUILDING in Across direction	8.7 m
Enter Length overall of BUILDING in Along direction	22.8 m
Area of top floor	190 sq m
Height top storey ceiling to top of ridge (roof height)	1.2 m
Height top storey floor to top storey ceiling (stud height)	2.4 m
Height from Finished Ground Level to ground floor (use the maximum height)	0.6 m

BRACING LINES Top or Single Storey HANNA STREET

Enter the lengths of walls (and diaphragms) along the required Lines
Lines A-F are for ACROSS direction. Enter "0" for Lines not required.

Line Name	Length of external wall along Line m	Length of internal wall along Line m	Total width of diaphragms attached m	Number of Dragon Ties attached	Min BUs
A	10.1	0.0	0.0	0	101
B	0.0	10.1	0.0	0	70
C	0.0	7.6	0.0	0	70
D	0.0	8.6	0.0	0	70
E	7.0	0.0	0.0	0	70
F	0.0	0.0	0.0	0	0
M	22.8	0.0	0.0	0	228
N	0.0	22.8	0.0	0	70
O	0.0	22.8	0.0	0	70
P	0.0	15.8	0.0	0	70
Q	7.8	0.0	0.0	0	78

BRACING LINES Foundations

Line Name	Length of external fdn along Line m	Length of internal fdn along Line m	Min BUs
A	10.1	0.0	101
B	0.0	10.1	70
C	0.0	7.6	70
D	8.6	0.0	86
E	0.0	0.0	0
F	0.0	0.0	0
M	16.0	0.0	160
N	0.0	16.0	70
O	0.0	16.0	70
P	~~16.0~~ 22.8	0.0	~~160~~ 228
Q	0.0	0.0	0

Foundation Type: 1 S
Table 4.1 (1S-9S)

* Foundation type OK

* Braced pile structure using timber or concrete piles

EARTHQUAKE BRACING REQUIREMENTS HANNA STREET

. [from table 4.7A and 6.1]

level	direction	area sq m	bracing per sq m	required bracing
top or single	across and along	190	2.0	380
foundation (min 280 BU) (cl 4.6.7.2)	across and along	190	5.0	950

WIND BRACING REQUIREMENTS

. [from table 4.7B and 6.2]

level	direction	perpendicular length m	bracing per metre	required bracing
top or single	across	22.8	58	1332
	along	8.7	66	572
foundation (min 640 BU) (cl 4.6.7.2)	across	22.8	107	2446
	along	8.7	115	998

ADDITIONAL INFORMATION

Design wind speed (to limit state level) for V high wind is 50 m/s
Design wind press (to limit state level) for V high wind is 1540 Pa

Design wind pressure for NZS 4211 & ch10 (window design) is 1550 Pa

Wall Bracing Schedule - TOP - ACROSS HANNA STREET

Bracing required for EQ 380 units:
Bracing provided for EQ 668 units:
Bracing required for WL 1332 units:
Bracing provided for WL 668 units:

Bracing minimum for each line is achieved

WALL ELEMENT				BRACING					LINE
name	angle deg	height m	length m	type	EQ rate BU/m	EQ prov BU	WL rate BU/m	WL prov BU	min BU
A1	0	2.4	2.4	K1A	42	101	42	101	A
A2	0	2.4	1.2	K4	67	80	67	80	
A3	0	2.4	0.0		0	0	0	0	
A4	0	2.4	0.0		0	0	0	0	
A5	0	2.4	0.0		0	0	0	0	
						181		181	101
B1	0	2.4	2.2	K2A	62	136	62	136	B
B2	0	2.4	0.0		0	0	0	0	
B3	0	2.4	0.0		0	0	0	0	
B4	0	2.4	0.0		0	0	0	0	
						136		136	70
C1	0	2.4	2.4	K2A	62	149	62	149	C
C2	0	2.4	0.0		0	0	0	0	
C3	0	2.4	0.0		0	0	0	0	
C4	0	2.4	0.0		0	0	0	0	
						149		149	70
D1	0	2.4	2.4	K1A	42	101	42	101	D
D2	0	2.4	0.0		0	0	0	0	
D3	0	2.4	0.0		0	0	0	0	
D4	0	2.4	0.0		0	0	0	0	
						101		101	70
E1	0	2.4	2.4	K1A	42	101	42	101	E
E2	0	2.4	0.0		0	0	0	0	
E3	0	2.4	0.0		0	0	0	0	
E4	0	2.4	0.0		0	0	0	0	
						101		101	70
F1	0	2.4	0.0		0	0	0	0	F
F2	0	2.4	0.0		0	0	0	0	

F3	0	2.4	0.0	0	0	0	0		
F4	0	2.4	0.0	0	0	0	0		
F5	0	2.4	0.0	0	0	0	0		
This program licensed for									
the sole use of					0		0	0	
Mount View				EQ	====	WL	====		
Construction				total	668	total	668		

Wall Bracing Schedule - TOP - ALONG HANNA STREET

Bracing required for EQ 380 units:
Bracing provided for EQ 814 units:
Bracing required for WL 572 units:
Bracing provided for WL 814 units:

Bracing minimum for each line is achieved

WALL ELEMENT				BRACING					LINE
name	angle deg	height m	length m	type	EQ rate BU/m	EQ prov BU	WL rate BU/m	WL prov BU	min BU
M1	0	2.4	2.4	K1A	42	101	42	101	M
M2	0	2.4	2.4	K1A	42	101	42	101	
M3	0	2.4	2.4	K1A	42	101	42	101	
M4	0	2.4	0.0		0	0	0	0	
M5	0	2.4	0.0		0	0	0	0	
M6	0	2.4	0.0		0	0	0	0	
						302		302	228
N1	0	2.4	2.4	K2A	62	149	62	149	N
N2	0	2.4	0.0		0	0	0	0	
N3	0	2.4	0.0		0	0	0	0	
N4	0	2.4	0.0		0	0	0	0	
N5	0	2.4	0.0		0	0	0	0	
N6	0	2.4	0.0		0	0	0	0	
						149		149	70
O1	0	2.4	2.4	K1A	42	101	42	101	O
O2	0	2.4	0.0		0	0	0	0	
O3	0	2.4	0.0		0	0	0	0	
O4	0	2.4	0.0		0	0	0	0	
O5	0	2.4	0.0		0	0	0	0	
						101		101	70
P1	0	2.4	2.4	K1A	42	101	42	101	P
P2	0	2.4	0.0		0	0	0	0	
P3	0	2.4	0.0		0	0	0	0	
P4	0	2.4	0.0		0	0	0	0	
P5	0	2.4	0.0		0	0	0	0	
P6	0	2.4	0.0		0	0	0	0	
						101		101	70

Q1	0	2.4	1.2	K4	67	80	67	80	Q
Q2	0	2.4	1.2	K4	67	80	67	80	
Q3	0	2.4	0.0		0	0	0	0	
Q4	0	2.4	0.0		0	0	0	0	
Q5	0	2.4	0.0		0	0	0	0	
Q6	0	2.4	0.0		0	0	0	0	
This program licensed for									
the sole use of						161		161	78
Mount View					EQ	====	WL	====	
Construction				.	total	814	total	814	

Foundation Bracing Schedule - ACROSS HANNA STREET

Bracing required for EQ 950 units:
Bracing provided for EQ 600 units:
Bracing required for WL 2446 units:
Bracing provided for WL 1380 units:

Bracing minimum for each line is achieved

SUBFLOOR ELEMENT				BRACING					LINE
name	angle deg	height m	length (or No)	type	EQ rate BU/m	EQ prov BU	WL rate BU/m	WL prov BU	min BU
A1	0	0.6	3.0	T14	70	210	160	480	A
A2	0	0.6	1.0		0	0	0	0	
A3	0	0.6	1.0		0	0	0	0	
A4	0	0.6	1.0		0	0	0	0	
A5	0	0.6	1.0		0	0	0	0	
						210		480	101
B1	0	0.6	3.0	T13	30	90	70	210	B
B2	0	0.6	1.0		0	0	0	0	
B3	0	0.6	1.0		0	0	0	0	
B4	0	0.6	1.0		0	0	0	0	
This program licensed to									
Mount View						90		210	70
Construction									
C1	0	0.6	3.0	T13	30	90	70	210	C
C2	0	0.6	1.0		0	0	0	0	
C3	0	0.6	1.0		0	0	0	0	
C4	0	0.6	1.0		0	0	0	0	
						90		210	70
D1	0	0.6	3.0	T14	70	210	160	480	D
D2	0	0.6	1.0		0	0	0	0	
D3	0	0.6	1.0		0	0	0	0	
D4	0	0.6	1.0		0	0	0	0	
						210		480	86
E1	0	0.6	1.0		0	0	0	0	E

E2	0	0.6	1.0	0	0	0	0		
E3	0	0.6	1.0	0	0	0	0		
E4	0	0.6	1.0	0	0	0	0		
					0		0		0
F1	0	0.6	1.0	0	0	0	0	F	
F2	0	0.6	1.0	0	0	0	0		
F3	0	0.6	1.0	0	0	0	0		
F4	0	0.6	1.0	0	0	0	0		
F5	0	0.6	1.0	0	0	0	0		
					0		0		0
				EQ total	600	WL total	1380		

Foundation Bracing Schedule - ALONG HANNA STREET

Bracing required for EQ 950 units:
Bracing provided for EQ 960 units:
Bracing required for WL 998 units:
Bracing provided for WL 2200 units:

Bracing minimum for each line is achieved

SUBFLOOR ELEMENT				BRACING					LINE
name	angle deg	height m	length (or No)	type	EQ rate BU/m	EQ prov BU	WL rate BU/m	WL prov BU	min BU
M1	0	0.6	4.0	T14	70	280	160	640	M
M2	0	0.6	1.0		0	0	0	0	
M3	0	0.6	1.0		0	0	0	0	
M4	0	0.6	1.0		0	0	0	0	
M5	0	0.6	1.0		0	0	0	0	
M6	0	0.6	1.0		0	0	0	0	
						280		640	160
N1	0	0.6	4.0	T13	30	120	70	280	N
N2	0	0.6	1.0		0	0	0	0	
N3	0	0.6	1.0		0	0	0	0	
N4	0	0.6	1.0		0	0	0	0	
N5	0	0.6	1.0		0	0	0	0	
N6	0	0.6	1.0		0	0	0	0	
						120		280	70
01	0	0.6	4.0	T14	70	280	160	640	0
02	0	0.6	1.0		0	0	0	0	
03	0	0.6	1.0		0	0	0	0	
04	0	0.6	1.0		0	0	0	0	
05	0	0.6	1.0		0	0	0	0	
						280		640	70

This program licensed to
Mount View
Construction

P1	0	0.6	4.0	T14	70	280	160	640	P
P2	0	0.6	1.0		0	0	0	0	
P3	0	0.6	1.0		0	0	0	0	
P4	0	0.6	1.0		0	0	0	0	
P5	0	0.6	1.0		0	0	0	0	
P6	0	0.6	1.0		0	0	0	0	
						280		640	160
Q1	0	0.6	1.0		0	0	0	0	Q
Q2	0	0.6	1.0		0	0	0	0	
Q3	0	0.6	1.0		0	0	0	0	
Q4	0	0.6	1.0		0	0	0	0	
Q5	0	0.6	1.0		0	0	0	0	
Q6	0	0.6	1.0		0	0	0	0	
						0		0	0
					EQ	====	WL	====	
				.	total	960	total	2200	

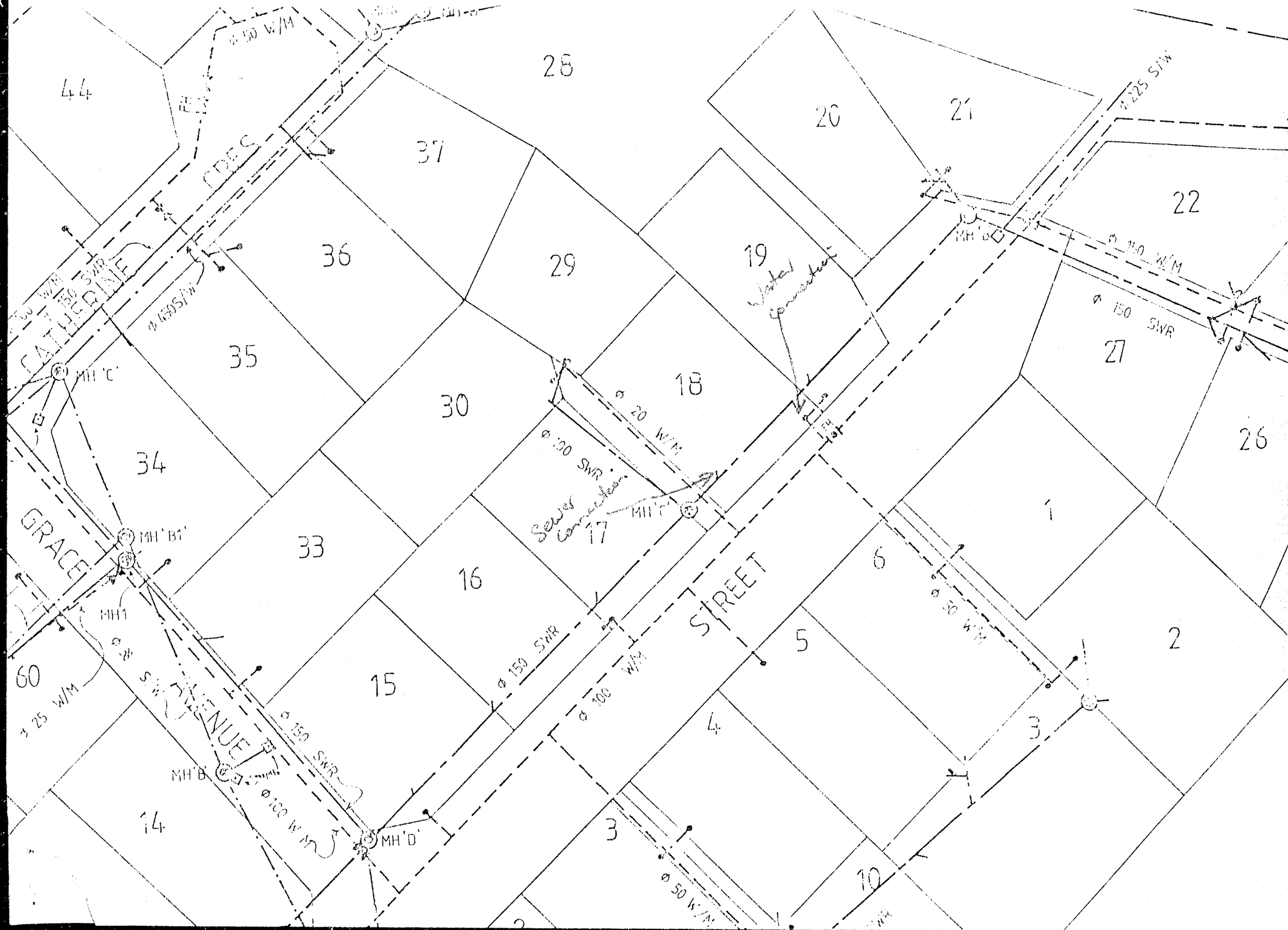
44
28
20
21
37
22
36
29
19
35
18
27
30
26
34
17
1
33
16
6
5
2
15
4
3
14
10
60
CATHERINE
GRACE
STREET
AVENUE
MH 'C'
MH 'B1'
MH1
MH 'B'
MH 'D'
MH 'A'
MH 'E'
Sewer connection
Water connection
Ø 150 W/M
Ø 150 SWR
Ø 150 S/W
Ø 20 W/M
Ø 100 SWR
Ø 100 W/M
Ø 50 W/M
Ø 25 S/W
Ø 25 W/M

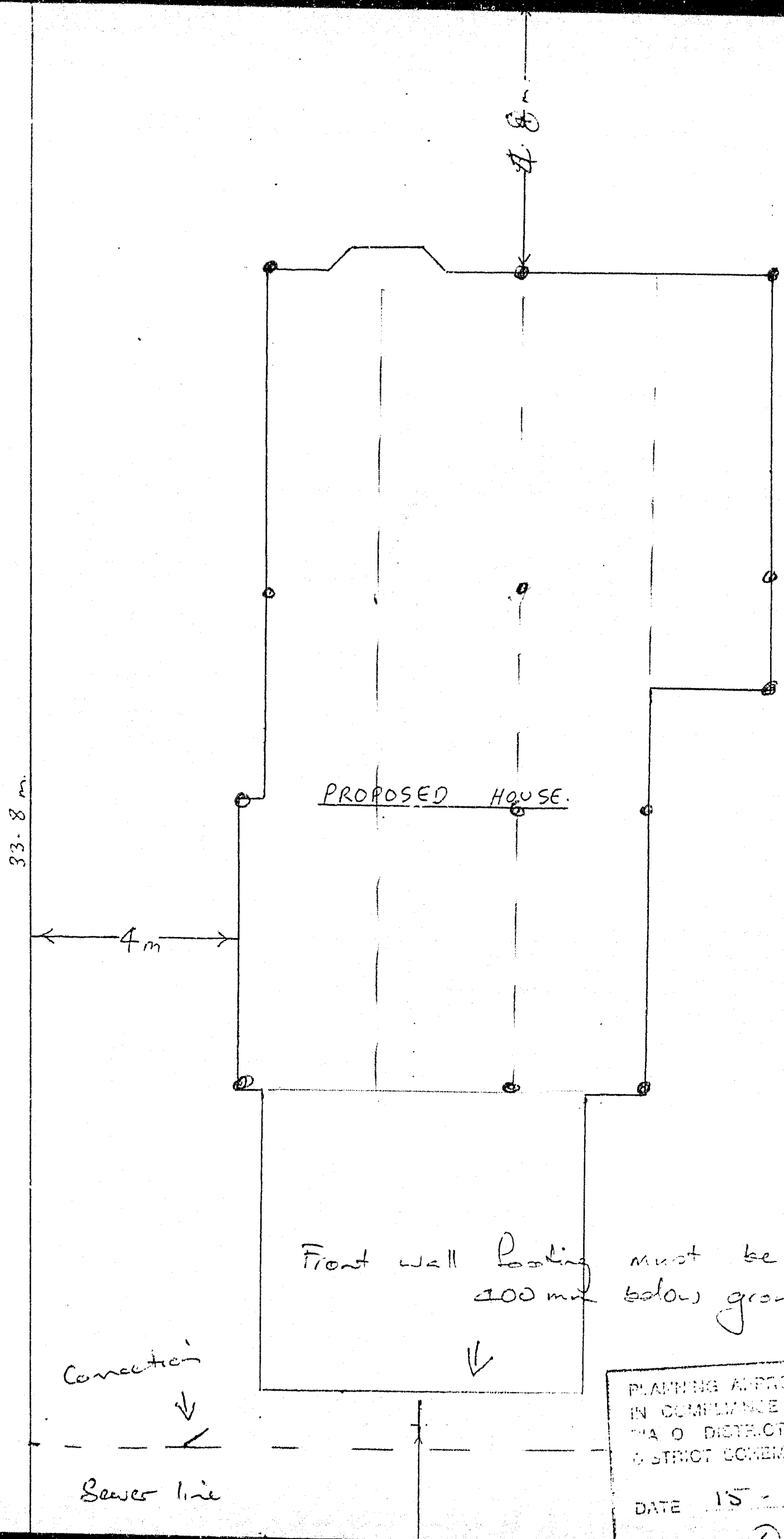

PLANNING APPROVAL IS HEREBY GIVEN IN COMPLIANCE WITH THE MATAMATA-PIA O DISTRICT COUNCIL OPERATIVE DISTRICT SCHEME.

DATE 15 - 12 - 92

5312/096.00 32 HANNA ST DWELLING

S3.2/096

Grant Crook
Consulting Civil and Structural Engineer

DESIGN CERTIFICATE

Date :26 / 1 / 93

To: The Chief Engineer
Matamata Piako District Council
Te Aroha.

I , Grant David Crook , certify that I am a Registered Engineer currently holding a Practising Certificate No. 1379 and that I have supervised the design of , and the calculations for the Cantilever Window Lintel for Mr and Mrs Brundson, Te Aroha..

I further certify that the proposed works have been designed to support the loads specified in NZS 4203 ; 1984 in accordance with sound , widely held principles ,without exceeding the stresses or deflection criteria in the various materials, or components provided they are erected in accordance with these calculations and sketches. Various aspects of the design are in accordance with the following :

NZS 3603 ; 1981 Timber

per: Grant Crook

G D Crook NZCE BE MIPENZ
Registered Engineer

Checked 28/1/93
M. B. Borg

P.O.BOX 245 WHANGAMATA PH. and FAX. 07 86 57199

RECEIVED FROM 078657199 01.26.1993 13:17 P. 2

MICROBOX ... CROFILM RECORDS (WAIKATO) LTD HAM

5312/096

GRANT D CROOK
CONSULTING ENGINEER
PO BOX 245 WHANGAMATA
PHONE+FAX 078657199

BRONDSON HOUSE : TE ARONA.
CANTILEVER CONCRETE LINTEL.

(1)
GDC
26.1.93
JOB 230.

CANTILEVER 1000

LOAD TO CANTILEVER.

FROM TRUSSED ROOF. SPAN 10100.

LOAD.

ROOF	CORR. IRON	0.06 kN/m²
	100 x 50 @ 900 c/c	0.02
	INSULATION	0.03
	TRUSSES	0.06
	BATTENS	0.02
	9.5 GIB	0.12
		0.32 say 0.35 Kpa

W(D.L) DL LL

ROOF 0.35 x 5.6 2 kN/m

0.25 x 5.6 1.4 kN/m

2 kN/m 1.4 kN/m

REACTION TO CANTILEVER

$R_{DL} = 2 \times \frac{1.5}{2} = 1.5$ kN

$R_{LL} = 1.4 \times \frac{1.5}{2} = 1.10$ kN

M_{max} TO CANTILEVER (D.L) $= 2.5 \times 1.0 + 0.4 \times \frac{0.4}{2} \times 1^2$

$= 2.6 + 0.32$

$= 2.92$ kNm

=> 200 x 100 No1 RAD PINE MAUOW = 4.60 kNm.

CHECK Δ(DL)

$\Delta = \frac{3000 \times 1000^3}{3 \times 414 \times 10^9} + \frac{160 \times 1000^3}{8 \times 414 \times 10^9} \times 2$

$= 2.4 + 0.11$

$= 2.5$ mm. $\Delta_{allow} = \frac{1000}{300} \times 2 = 6.7$ mm.

MICROBOX MICROFILM RECORDS (WAIKATO) LTD HAMI

GRANT D CROOK
CONSULTING ENGINEER
PO BOX 245 WHANGAMATA
PHONE+FAX 078657199

BEAMISH HOUSE
CANTILEVER CORNER LINTEL.

5312/096
(2)
LDC
26-1-93
JOB 230

R_B (DL) $= 1.5 \times 1.0 + \frac{0.2 \times 1.0^2}{2} - \frac{0.2 \times 1.3^2}{2}$

$= 1.5 + 0.1 - 0.17$

$= 1.6 + 0.17$

$= 1.4$ kNm

$R_B = \frac{1.4}{1.3} = 1.1$ kN

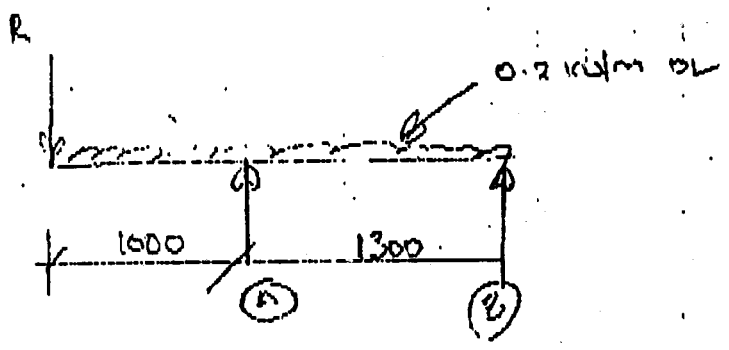

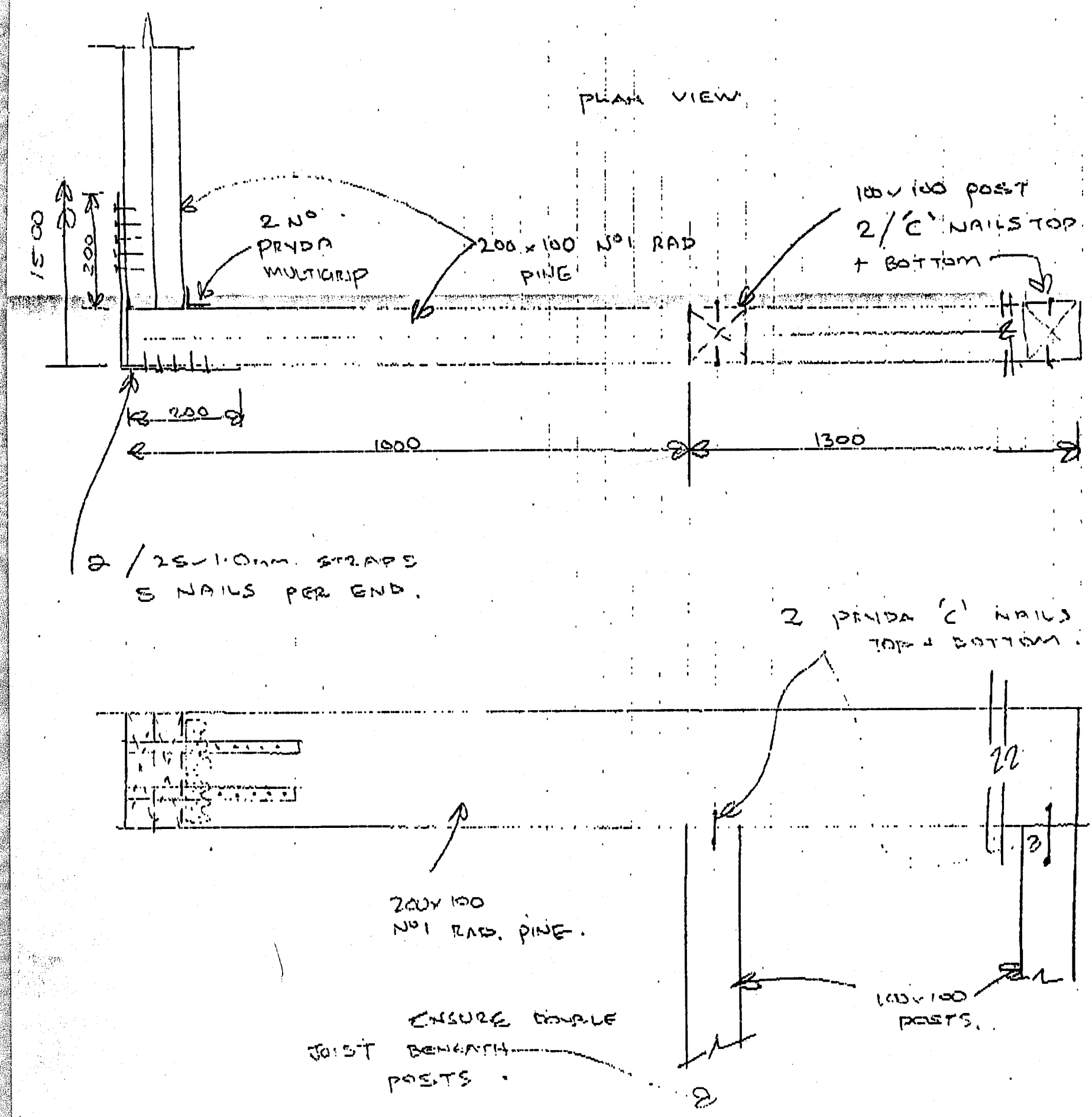

S3 12/96

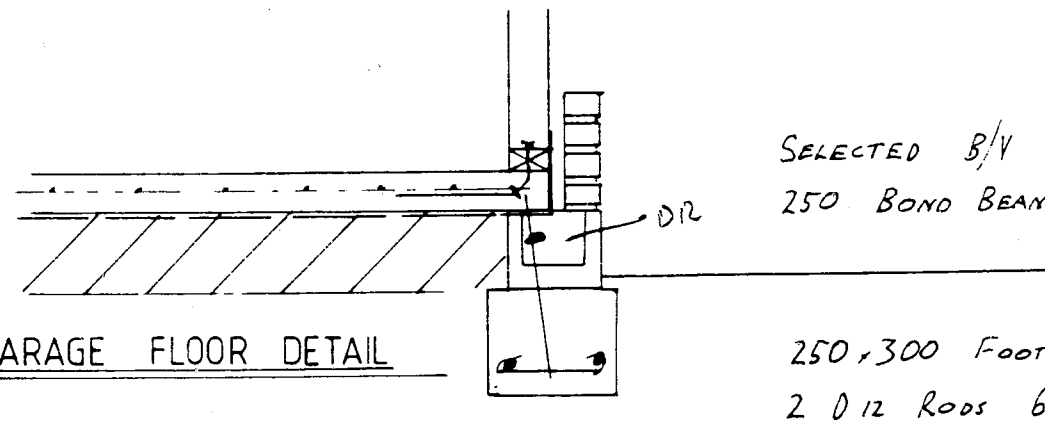

GARAGE FLOOR DETAIL

SELECTED B/V
250 BOND BEAM BLOCK

250 x 300 FOOTING
2 D12 RODS 6mm STARTERS 800 crs.
POLYTHENE, 100mm SLAB, 668 MESH

COLOURSTEEL ROOFING
100 x 50 PURLINS @ 900 crs
TRUSSES TO DESIGN
40mm CEILING BATTONS at 400 ¢
9.5 GIB CEILINGS
BATTS TO WALLS & CEILINGS

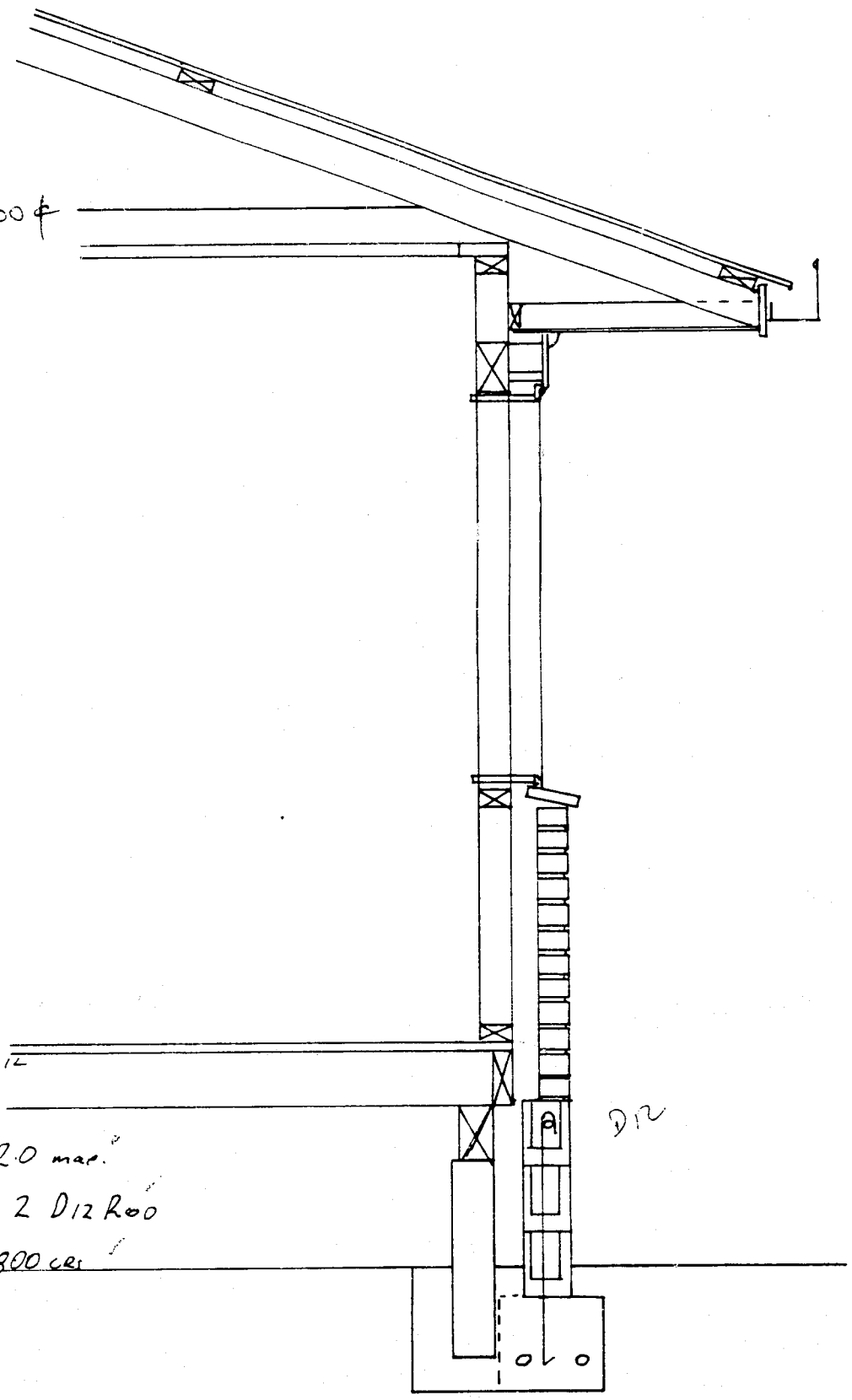

20 — PARTICAL BOARD OVER FOIL
150 x 50 JOISTS @ 450 crs
150 x 100 BEARERS PILES @ 2.0 max.
B/V FOOTING 250 x 200 WITH 2 D12 ROD
150mm BLOCKWORK, STARTERS @ 800 crs

TYPICAL DETAIL

Footing for brick veneer must be poured at the same time as the pile footing and connected to them.

			SHEET 4
DRAWN	CHECKED	SCALES	SERIES OF 4
TRACED	DATE		REF

MICROBOX
PLM RECORDS (WAIKATO) LTD HAMILTON

5312/096

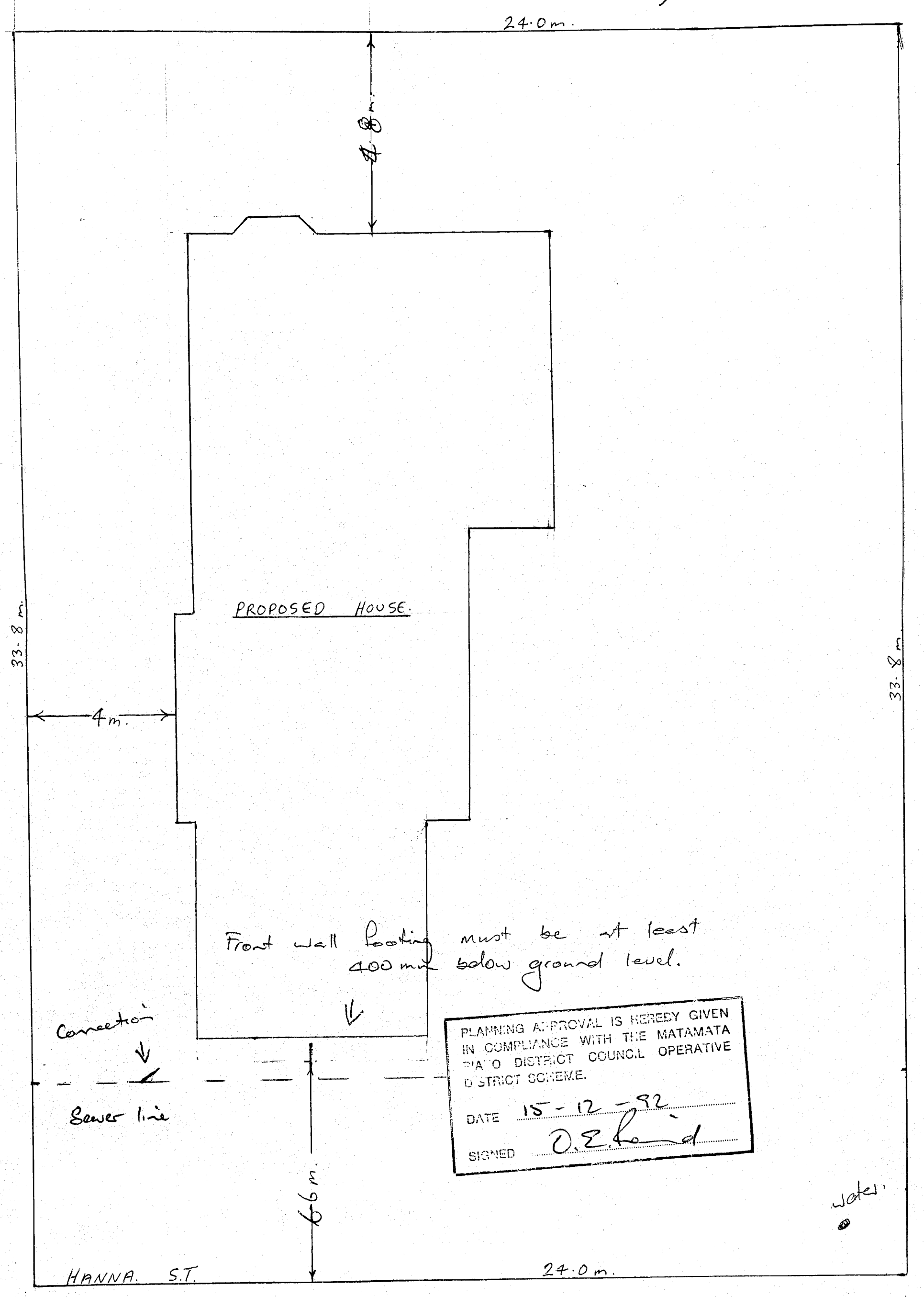

PLANNING APPROVAL IS HEREBY GIVEN IN COMPLIANCE WITH THE MATAMATA PIA'O DISTRICT COUNCIL OPERATIVE DISTRICT SCHEME.

DATE 15-12-92

SIGNED D.E. Ford

SITE PLAN. SCALE = 1:100.

HANNA. STREET. LOT. 18

MICROBOX ... RECORDS (WAIKATO) LTD HAMILTON

5312/096

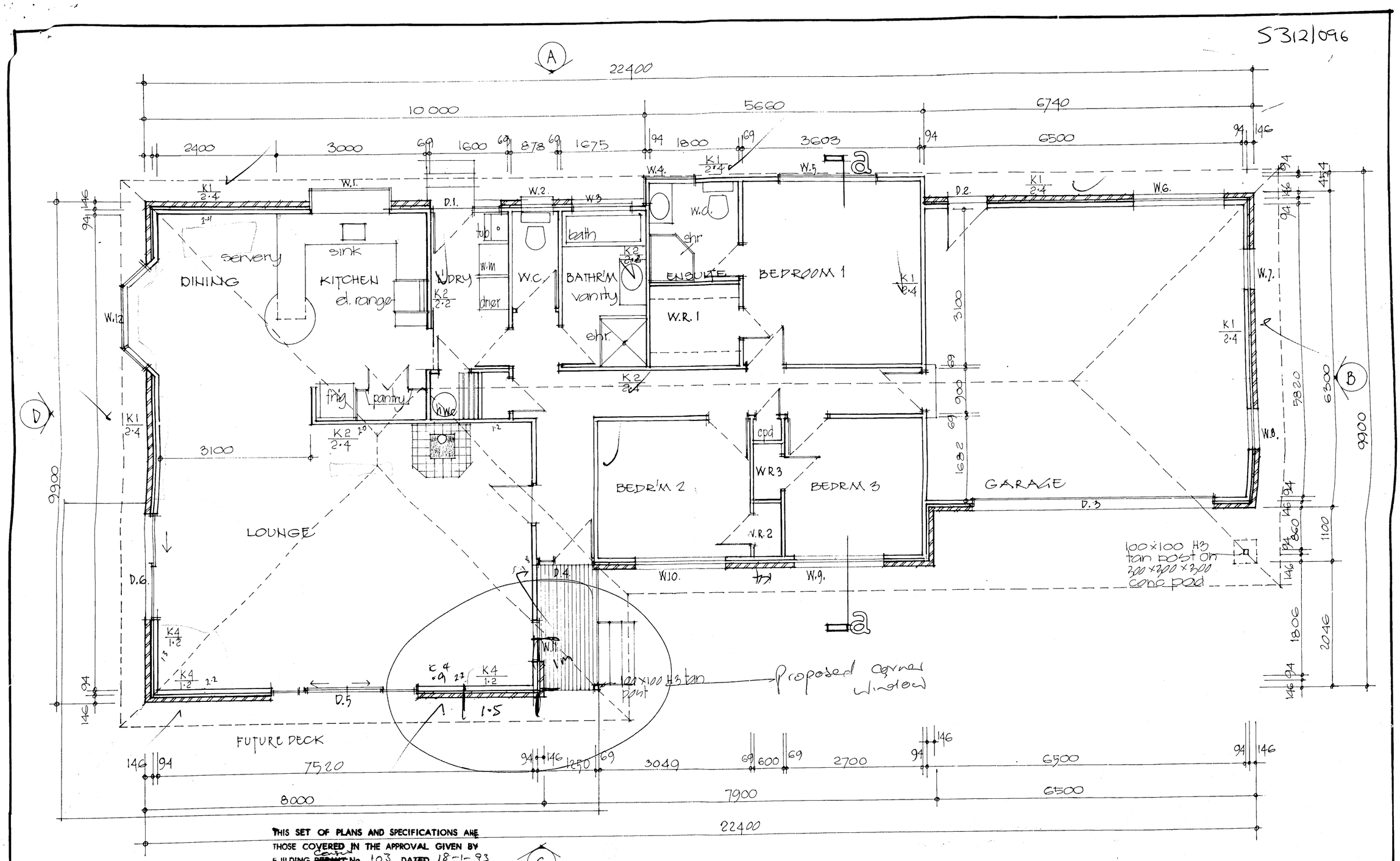

THIS SET OF PLANS AND SPECIFICATIONS ARE THOSE COVERED IN THE APPROVAL GIVEN BY BUILDING ~~PERMIT~~ consent No. 103 DATED 18-1-93 AND THESE DOCUMENTS MUST BE RETAINED ON THE SITE OF THE WORKS DURING CONSTRUCTION.

BUILDING INSPECTOR

DATE

Plan Reversed.

MOUNT VIEW CONSTRUCTION LTD
TE AROHA

PROPOSED NEW RESIDENCE FOR MR & MRS R. BRUNDSON

FLOOR PLAN

drawn I.D.	Nov'92	scales 1:50	1 series of 5

MICROBOX
MICROFILM RECORDS (WAIKATO) LTD, HAMILTON 20/8/93

5312/096.00 32 HANNA ST DWELLING

S 312/096

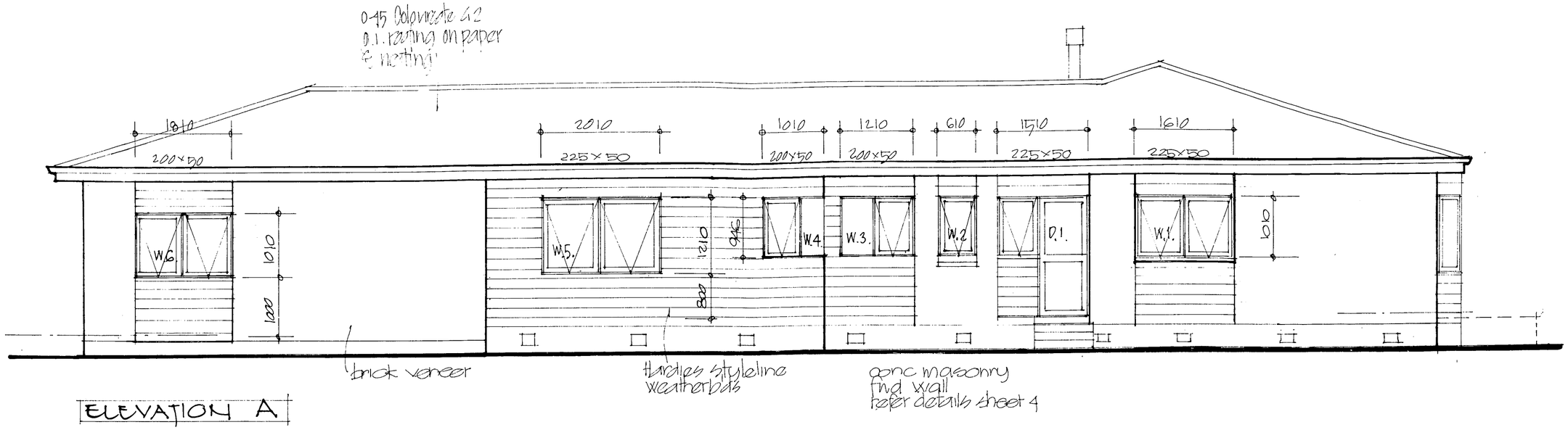

ELEVATION A

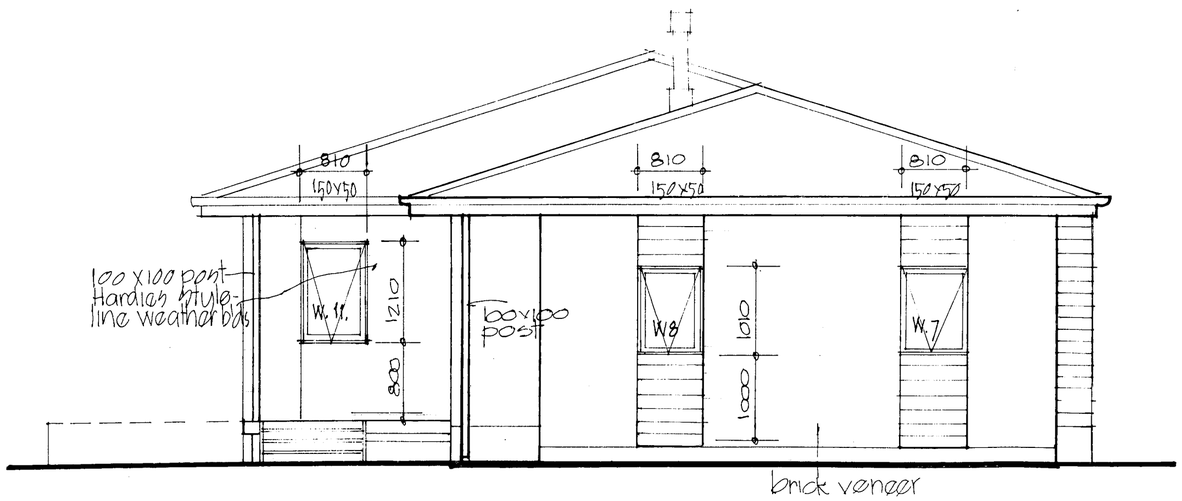

ELEVATION B

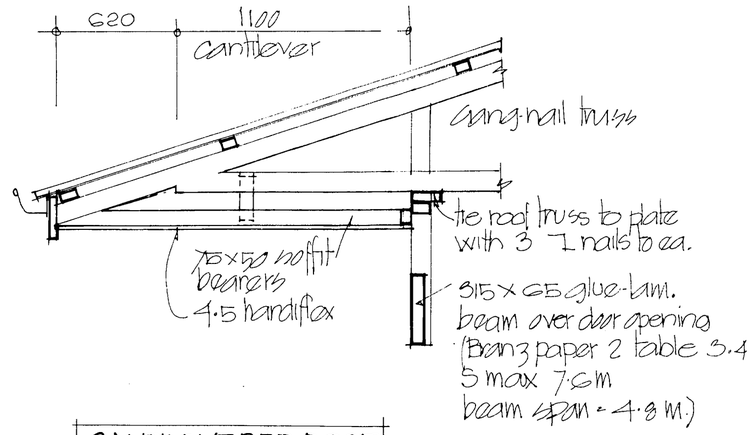

CANTILEVERED ROOF
OVER GARAGE DOOR

MOUNT VIEW CONSTRUCTION LTD. TE AROHA	PROPOSED NEW RESIDENCE FOR MR & MRS R BRUNDSON	ELEVATIONS	2
		drawn L.D. / Nov '92 / scales 1:50 1:20	series of 5

MICROBOX
MICROFILM RECORDS (WAIKATO) LTD, HAMILTON 20/8/93

S312/096

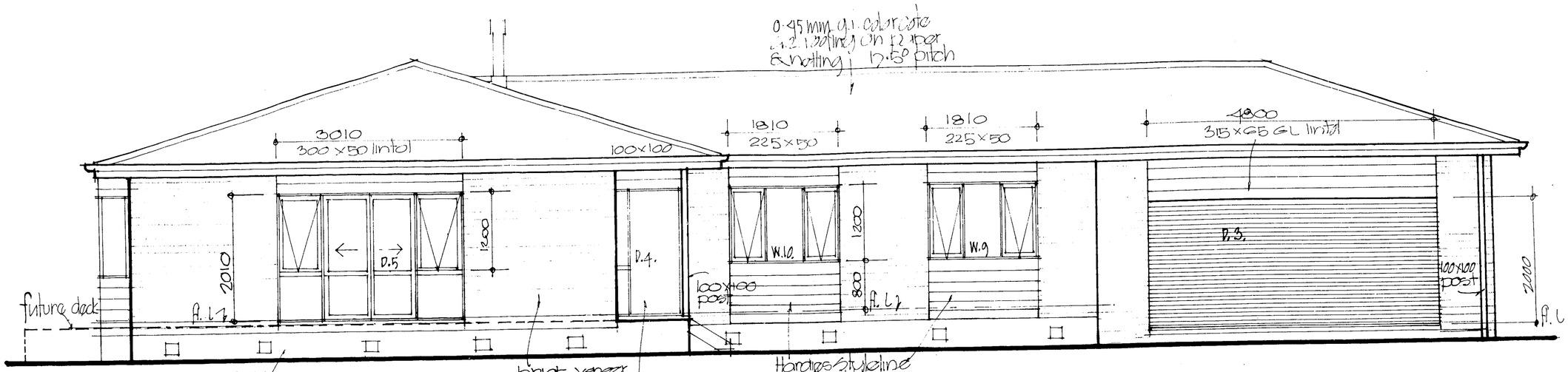

ELEVATION C.

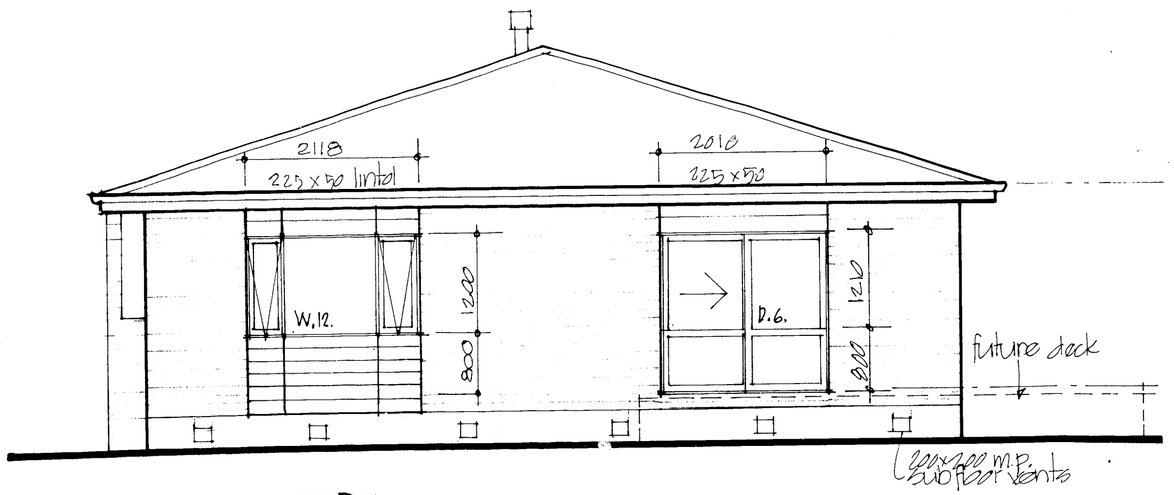

ELEVATION D.

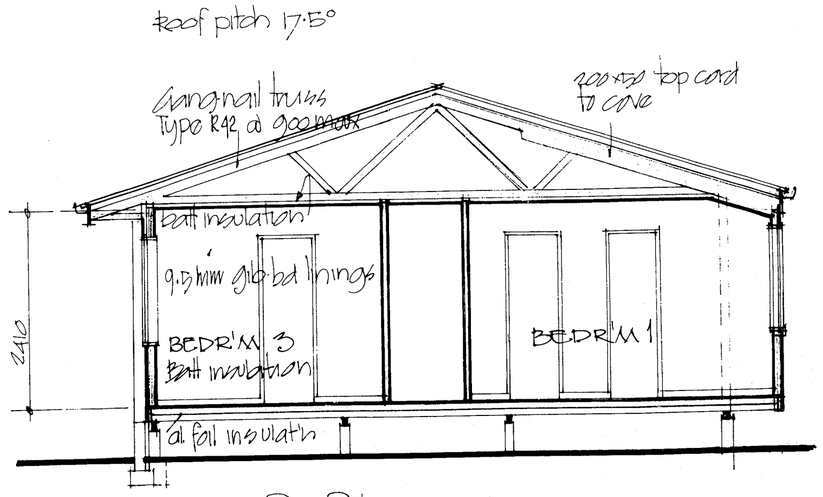

SECTION a-a

Read section in conjunction with details on sheet 4 of drawings.

MOUNT VIEW CONSTRUCTION LTD. TE AROHA	PROPOSED NEW RESIDENCE FOR MR & MRS R BRUNDSON	ELEVATIONS	3
		drawn L.D. Nov '92 / Scales 1:50	series of 5

MICROBOX
MICROFILM RECORDS (WAIKATO) LTD, HAMILTON
20/8/93

S 312/096

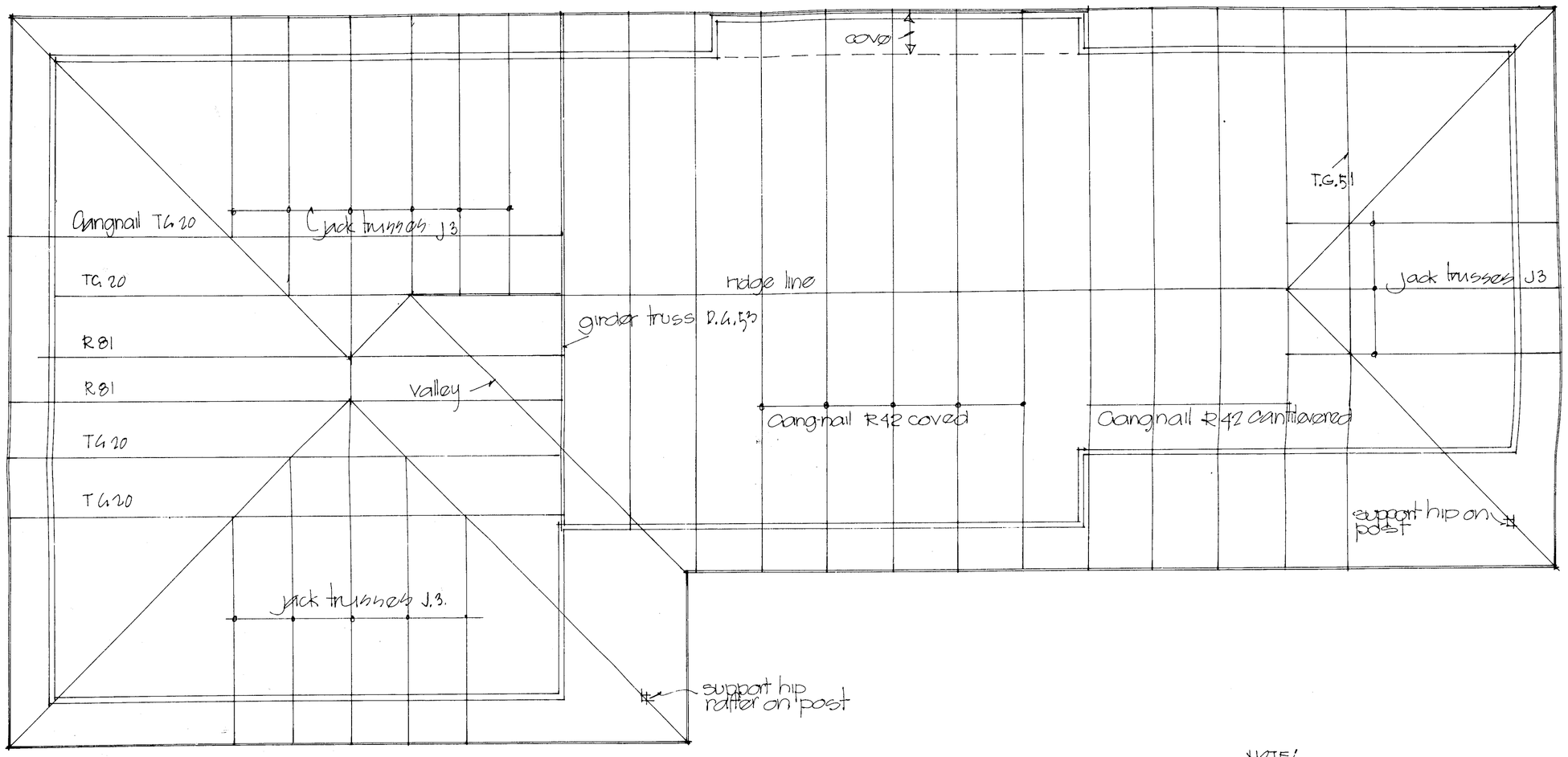

NOTE:
TRUSS LAYOUT & SELECTION
TO BE CONFIRMED BY GANGNAIL
FABRICATOR.

MOUNT VIEW CONSTRUCTION LTD. TE AROHA	PROPOSED NEW RESIDENCE FOR MR & MRS R BRUNDSON	ROOF FRAME PLAN		5
		drawn I.D	scale 1:50	sheets of 5
		Nov '92		

MICROBOX
MICROFILM RECORDS (WAIKATO) LTD, HAMILTON 20/8/93